Product data sheet

Universal rotary dimmer, LED

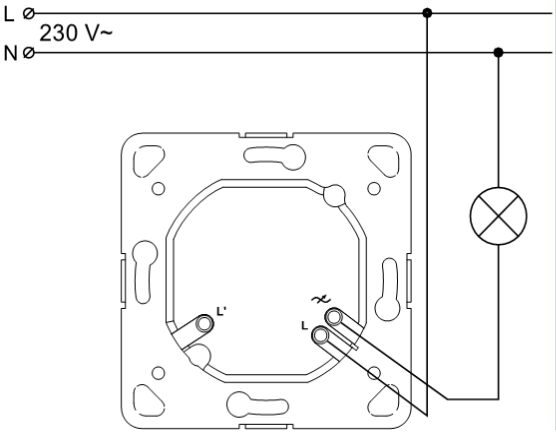

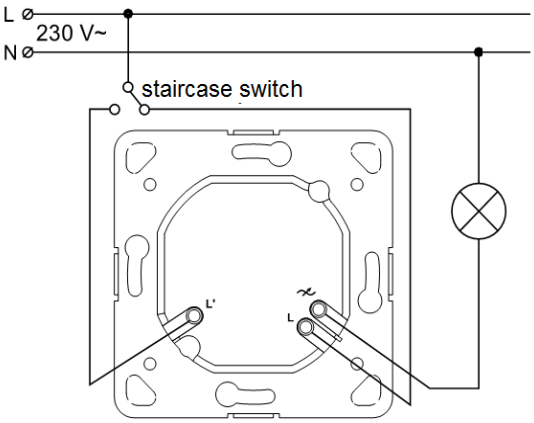

Reference number

ISR-005-01 /DPI-01

Universal rotary dimmer for LED, without frame

incremental control without end position
with satellite input

Intended use

- Switching and dimming of lighting
- Operation with suitable cover
- Installation in flush box according to DIN 49073

Product characteristics

- Device works according to the “leading edge phase control” or “trailing edge” principle
- Device can be operated without neutral conductor
- Switch-on via bulb-preserving soft start
- Switch-on with last brightness
- Connection of satellite units possible

Colour, individual barcode:

ISR-005-01.E/B - White, 4770025960936, 10pc. package 4770025960943
ISR-005-01.E/S - Sandy, 4770025963319, 10pc. package 4770025963326
ISR-005-01.E/R - Brown, 4770025963371, 10pc. package 4770025963388
ISR-005-01.E/Mt - Metallic, 4770025963357, 10pc. package 4770025963364
ISR-005-01.E/J - Black, 4770025963333, 10pc. package 4770025963340
ISR-005-01.E/Ch - Champagne, 4770025963395, 10pc. package 4770025963401
ISR-005-01.A/B - White, 4770025965955, 10pc. package 4770025965962
ISR-005-01.A/S - Sandy, 4770025965979, 10pc. package 4770025965986

Technical specifications:

Rated voltage, frequency	AC 230 V / 50 Hz
Working mode	leading edge dimming or trailing edge dimming
Stand-by power	approx. 0.35 W
Power loss	approx. 4 W
Ambient temperature	−20 ... +45 °C
Wiring	max.1mm2
Incandescent, halogen lamps	10 ... 250 W
Electronic transformers	10 ... 250 W
Electronic transformers with LV LED	typical 3 ... 100 W
Inductive transformers	10 ... 250 VA
Dimmable HV LED lamps	typical 3 ... 100 W
Dimmable compact fluorescent lamps	typical 3 ... 100 W

Not suitable for toroidal transformers!

MADE IN LITHUANIA SINCE 1944